REVISIONS					
REV.	REV. DATE	CHK. BY	CHK. DATE	ENG.	DESCRIPTION
06	13JAN03	CLH	13JAN03	DJB	REVISED PER AS-BUILT

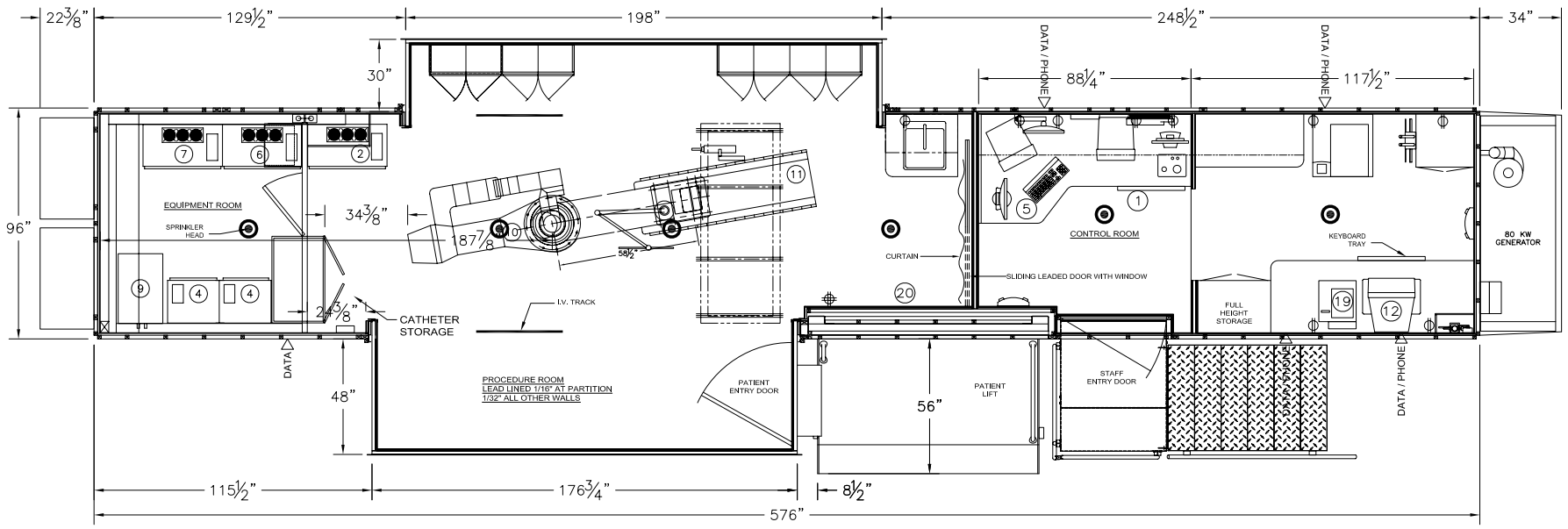

TOP PLAN VIEW

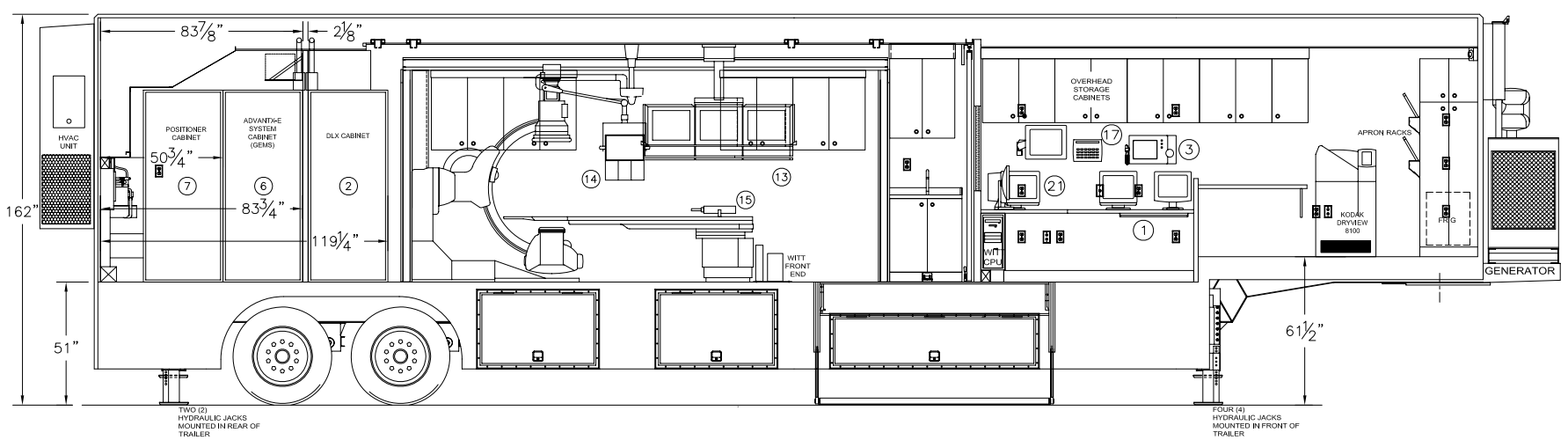

LEFT SIDE ELEVATION

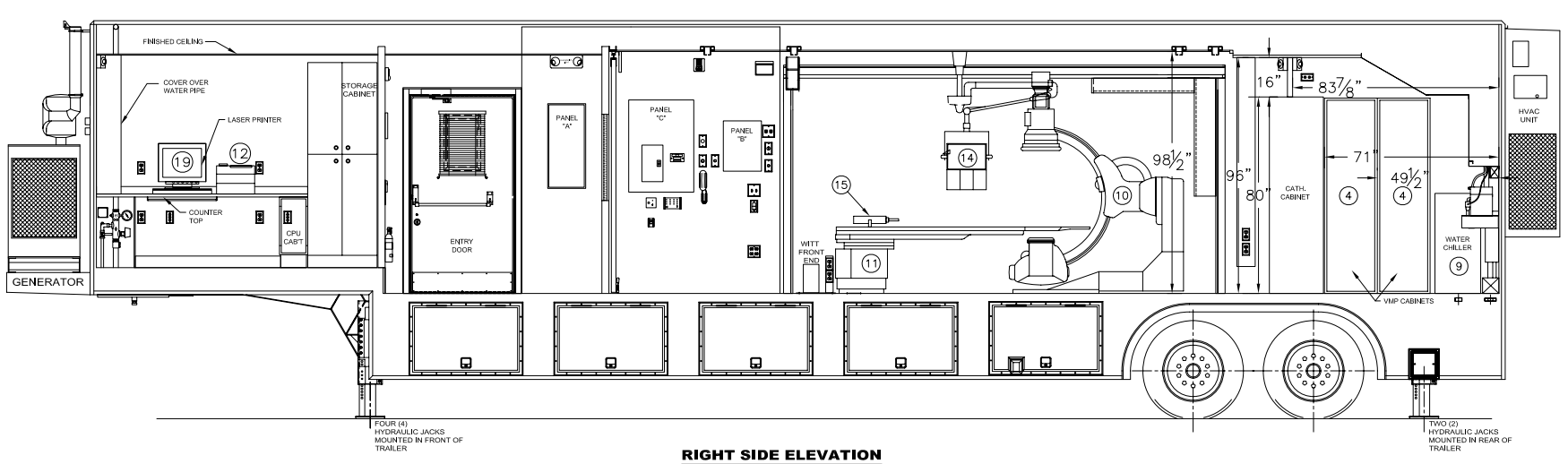

RIGHT SIDE ELEVATION

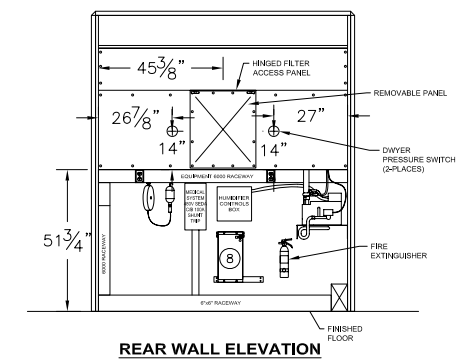

REAR WALL ELEVATION

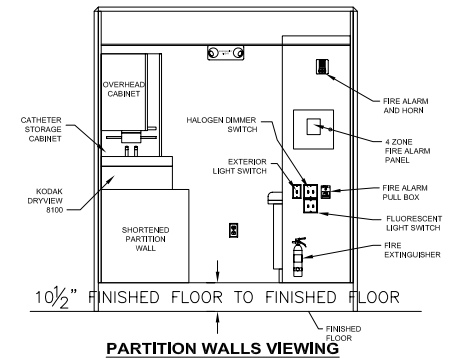

PARTITION WALLS VIEWING INTO FRONT OF TRAILER

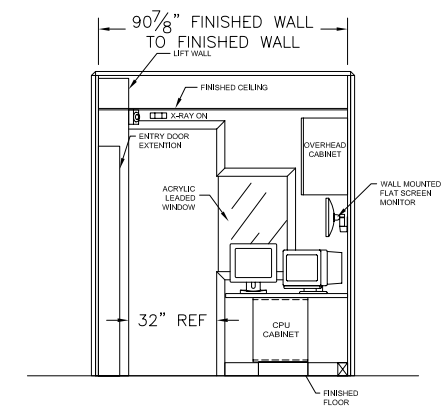

PARTITION WALL VIEWING INTO PROCEDURE ROOM

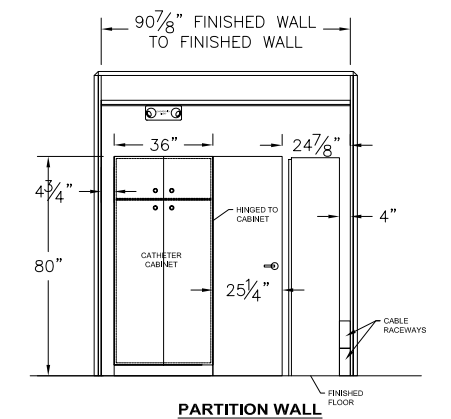

PARTITION WALL VIEWED LOOKING INTO EQUIPMENT ROOM

PARTITION WALL VIEWS

ITEM	QTY	PART NUMBER	DESCRIPTION
21	1		DIAMETOR DOSIMETER
20	1		ISOLATED POWER BREAKER PANEL
19	1		LASER PRINTER
18			
17	1		REMOTE CONTROL FOR INJECTOR
16	1		INJECTOR ELECTRONICS
15	1		INJECTOR HEAD ON TABLE RAIL
14	1		OVERHEAD SUSPENSION WITH LEAD GLASS SHIELD
13	1		XT SUSPENSION WITH 3 MONITORS
12	1		GEMNET CARDIAC REVIEW STATION
11	1		OMEGA IV ANGIO TABLE (GEMS)
10	1		LCV+ POSITIONER WITH LEAD GLASS SHIELD (GEMS)
9	1		WATER CHILLER
8	1		STEP DOWN TRANSFORMER
7	1		POSITIONER CABINET
6	1		ADVANTX-E SYSTEM CABINET (GEMS)
5	1		WITT WORKSTATION
4	1		ADVANTX VMP 100 GENERATOR (GEMS)
3	1		ADVANTX OPS CONSOLE (GEMS)
2	1		DLX ELECTRONIC CABINET (GEMS)
1	1		DLX OPERATOR'S CONSOLE (GEMS)

BILL OF MATERIALS

THIS DRAWING IS PROVIDED ON A CONFIDENTIAL BASIS SUBJECT TO RETURN ON DEMAND OF OSHKOSH SPECIALTY VEHICLES ("OSHKOSH"), WHICH RETAINS ANY AND ALL RIGHTS ASSOCIATED WITH IT AND THE ARTICLE OR ARTICLES IT REPRESENTS. DISCLOSURE, REPRODUCTION OR ALTERATION OF ANY PART OF THIS DRAWING: OR MANUFACTURE, USE OR SALE OF THE ARTICLE OR ARTICLES REPRESENTED, IS PROHIBITED WITHOUT THE PRIOR WRITTEN AUTHORIZATION OF OSHKOSH, © OSHKOSH SPECIALTY VEHICLES (unpublished).

SHEET NUMBER:	REFERENCE DRAWING:	TITLE:	DATE:	SCALE:
1 OF 1		GENERAL LAYOUT GE ADVANTX LCV+ CATH LAB 8'-3" X 13'-6" X 48'-0" TRAILER	24JUN02	3/8"=1'-0"
JOB#			DRAWN BY:	
			CHECKED BY:	
			DRAWING NUMBER: 10109-A01	

OSHKOSH SPECIALTY VEHICLES
16745 S. LATHROP AVENUE
HARVEY, IL. 60426
PHONE: (708) 596-5066
FAX: (708) 596-2480